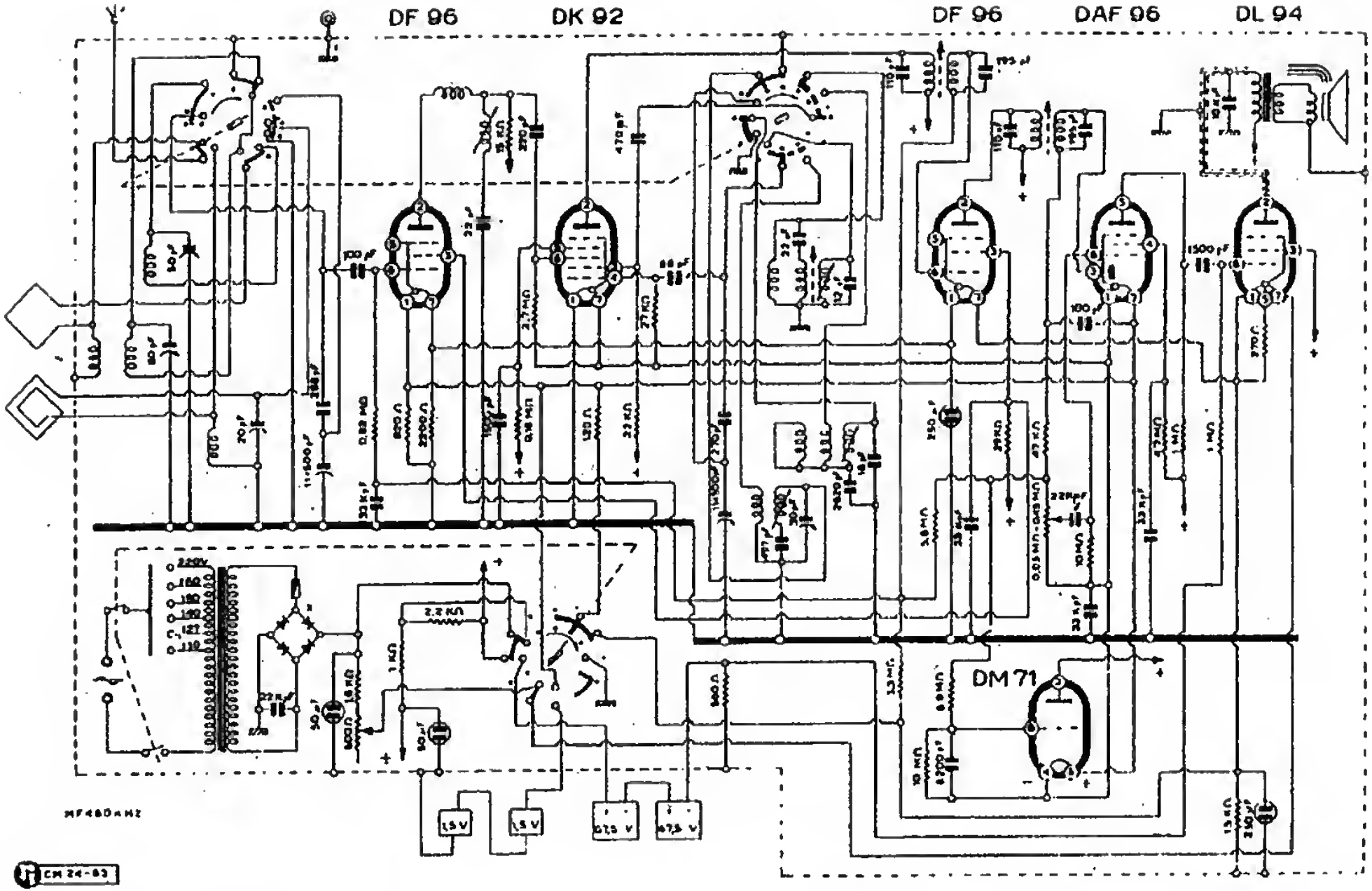

PHILIPS RADIO - Mod. LI 437/AB